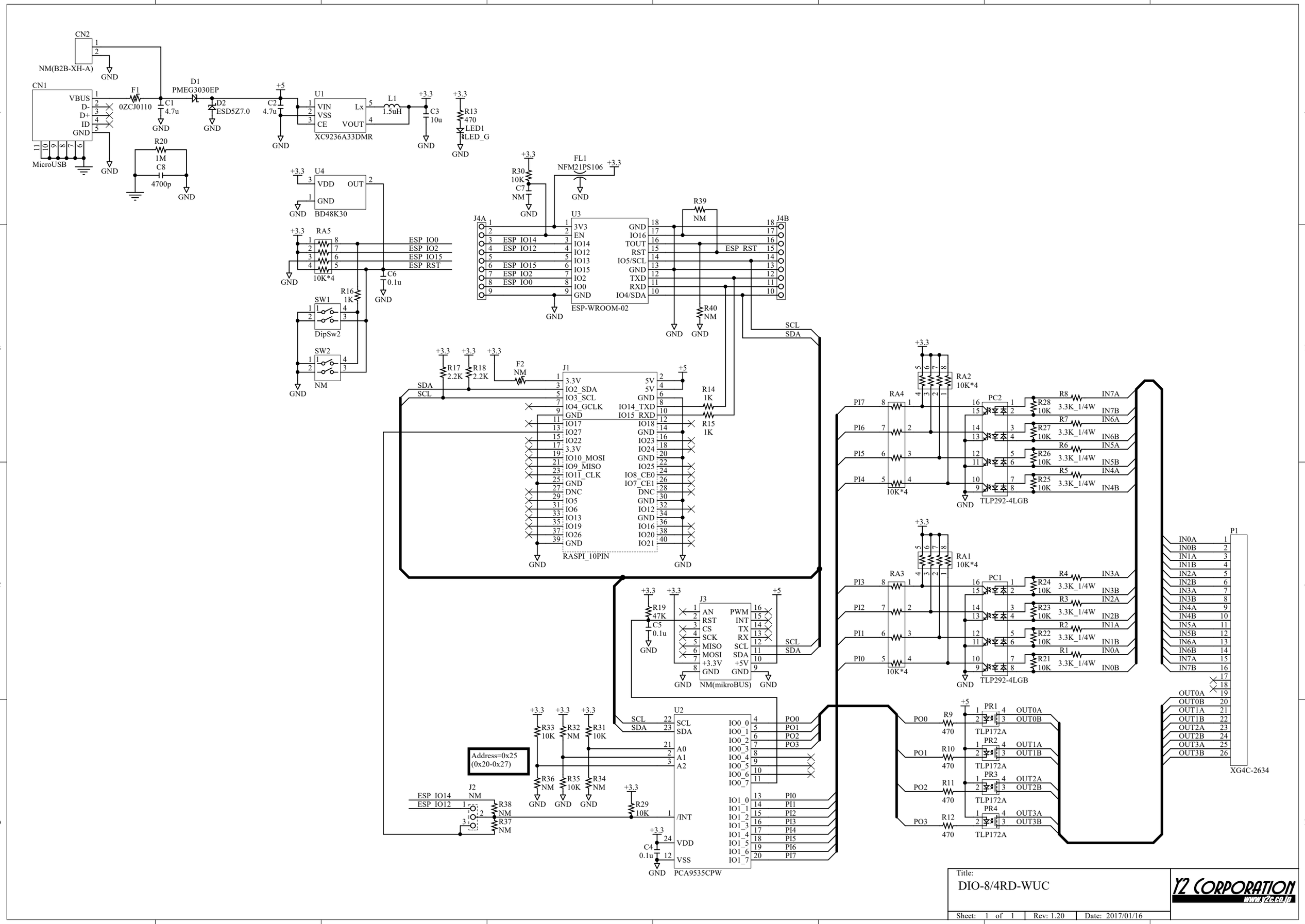

Title:
DIO-8/4RD-WUC

Y2 CORPORATION
www.y2c.co.jp

Sheet: 1 of 1 | Rev: 1.20 | Date: 2017/01/16